Lab 04: Edge Detection– Tutorial

Step 1: Start LabVIEW(LV) Robotics 2011, and then create a new robotics project. The project explorer window will then pop up. Save this project as Lab3EdgeDetection. Once the project has been created it will automatically build and open the Roaming VI. Minimize this for now; however, we will be altering elements of this code later.

Step 2: From the project explorer window create a new Virtual Instrument (VI). Right click "Starter Kit 2.0 sbRIO (Some IP Address)" on the project tree and select "new" and then VI. Save this VI as RoamingWithEdgeDetection. Two windows will open: the block diagram and the front panel. For the purpose of robotics we will rarely ever use the front panel as the labs in this course require autonomous operation.

Step 3: This is the main VI for this project. In this VI we will make a call to a sub VI we will create later. Build the VI seen in figure 3.1. If you have any difficulty building this VI please reference the tutorial for lab 2. You will notice that there are 3 frames in the flat sequence structure. The First frame was intentionally left empty; we will be adding something to this block later. The Next frame will cause the robot to back up for a short distance. The final frame in the flat sequence structure will turn the robot 90 degrees.

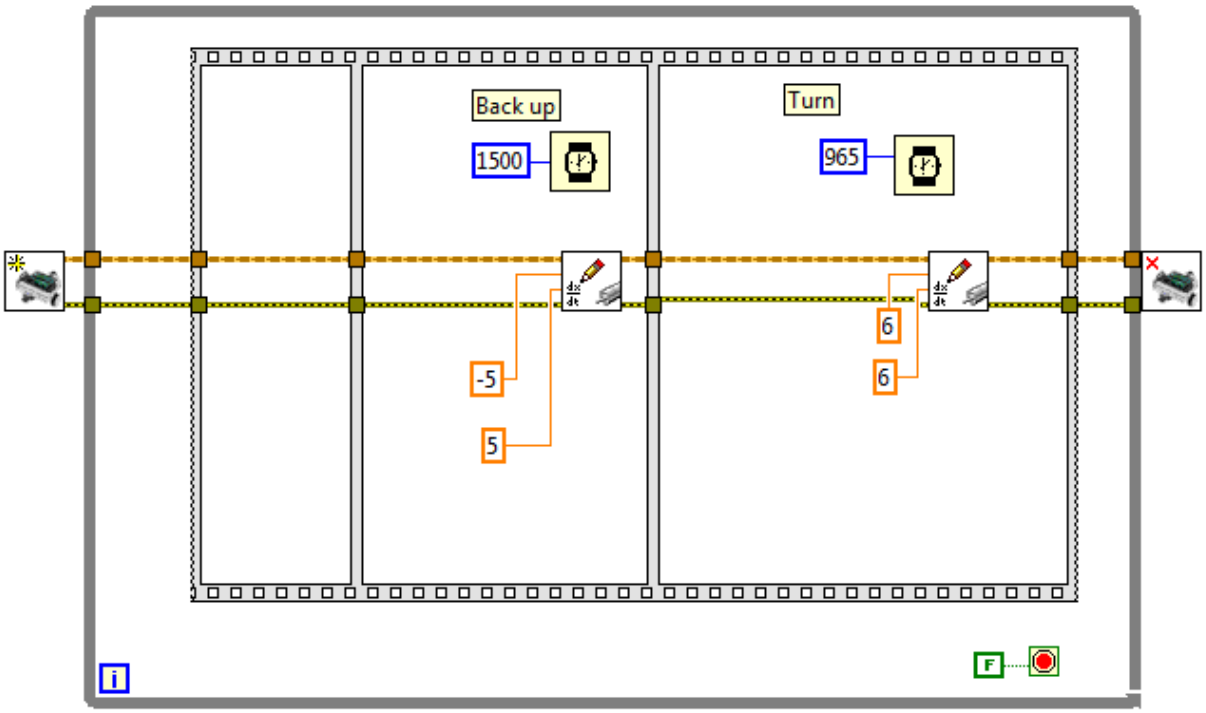

Figure 3.1

Step 5: Now we will create a sub VI that will handle roaming and edge detection. Create a New VI and save it as RoamingSubVI. Maximize the roaming VI that was minimized earlier and copy the contents of the block diagram. Paste this into the RoamingSubVI's block diagram. We will need to make a few changes to the code so that we can use it as a sub VI. Delete the initialize and close references as shown in figure 3.2 and 3.3. Do not delete the wires.

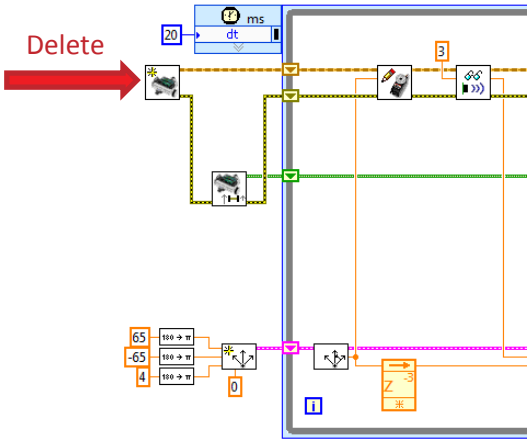

Figure 3.2

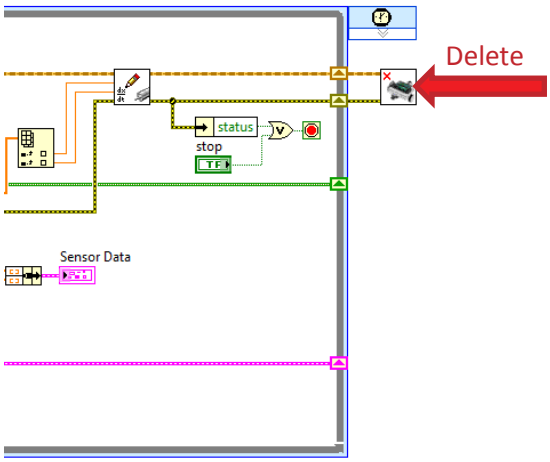

Figure 3.3

Step 6: Next right click on the host wire that was previously connected to the initialize and create a control. Repeat this process with the error wire that was previously connected to the initialize. See figure 3.4.

Right Click à *Create* à *Control*

Step 7: Next right click on the host wire that was previously connected to the close and create an indicator. Repeat this process with the error wire that was previously connected to the close. See figure 3.4.

Right Click à *Create* à *Indicator*

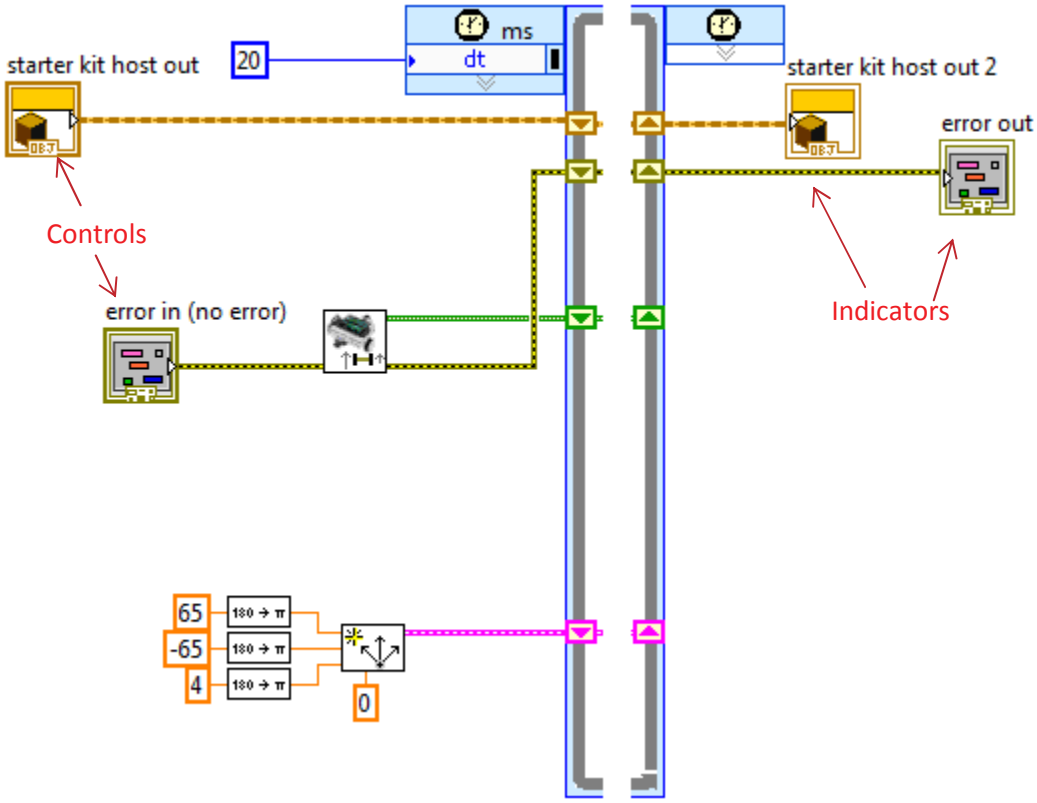

Figure 3.4

Step 8: We now need to make changes to the stop conditions for this VI so that the loop will exit when the sensors detect an edge. In this lab we use an infrared sensor to detect edges. We need to add two direct IO statements to our VI for these sensors.

Right Click à *Robotics* à *Starter Kit* à *2.0* à *Direct I/O* à *Read AI*

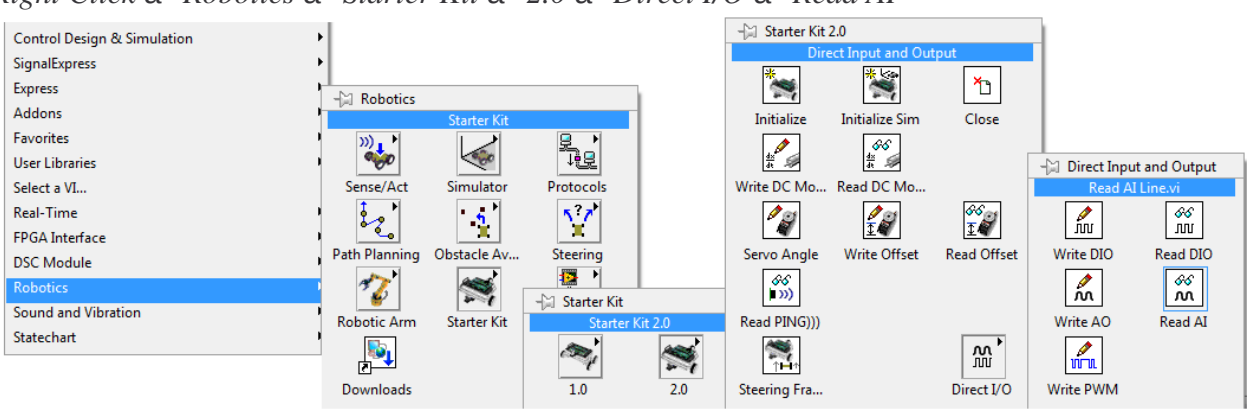

Figure 3.5

After placing the Read AI statements right click the AI line and add a constant. Make sure the analog input that is chosen corresponds to where the sensors are plugged in.

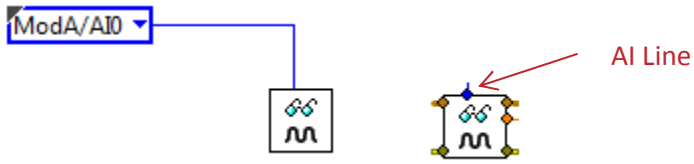

Figure 3.6

Step 9: Now that we can read the distance values (this value is actually the raw voltage), we can use the graph in the datasheet for the infrared sensor to see what voltage corresponds to what distance. Also, testing the sensor and observing what the voltage reading needs to stay above is also good. For our implementation of this code we found that as long as the voltage stays above 1.2V then the robot has not detected an edge (this voltage value will vary based on the distance between the sensor and the ground). Any lower and that means that there has been an increase in the distance seen. Thus, to analyze both sides we must compare this value of 1.2V to what is seen by the sensor. So place two less than symbols on the block diagram and wire both readings to one of the less than symbols. For the other input of each less than symbol, create a constant input and set it to 1.2V. An OR symbol must then be placed on the block diagram. Wiring the outputs of both less than symbols to the OR symbol to complete our comparison to check whether one of the sensors has detected a greater distance. Lastly, place another OR symbol and connect the output of the OR symbol for the distance readings and the other OR symbol with the inputs coming from the constant and status. Wire the output of this OR symbol to the stop condition for the loop. When you have finished this step your VI should look like figure 3.7.

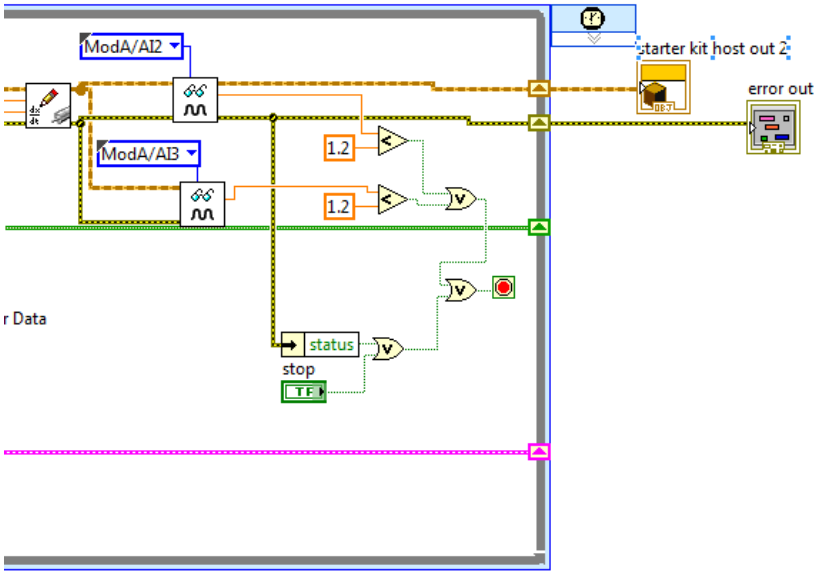

Figure 3.7

Step 10: To finish this subVI, we will now make the connections to the connector pane. To do this, go to the front panel and right click on the icon in the right hand corner. Click on show connector pane. The left side of the connector pane along with the center is all blocks for inputs to the VI and the right sides are for the outputs of the VI. To assign inputs, click one of the blocks on the left side and then select one of the controls that we set up before. Once that is done for each input we do the same for each output but click on blocks on the right side of the connector pane. The figure below shows the inputs and outputs being connected to the connector pane.

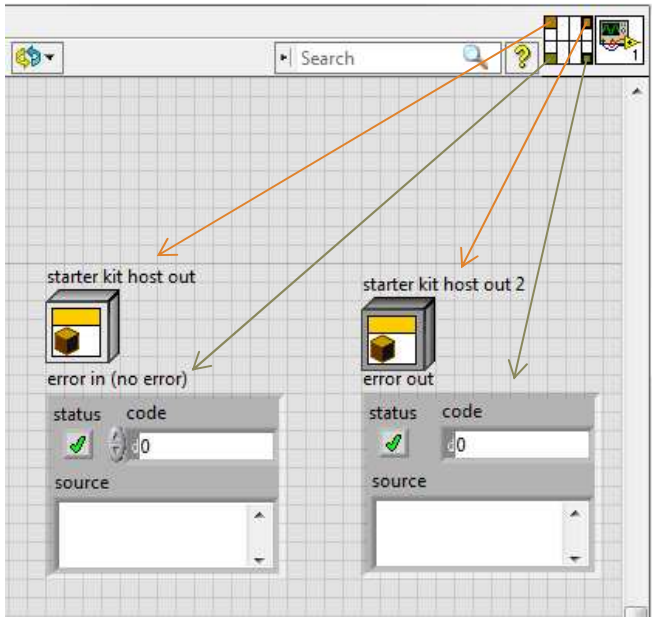

Figure 3.8

Step 11: Now return to the RoamingWithEdgeDetection VI (figure 3.1). In the first block of the flat sequence (the one we left empty), we will place the RoamingSubVI we created. To do this, right click inside the block of the flat sequence, select “Select a VI…” and then browse your files until you find your roamingSubVI.vi. Place this VI and then connect the wires. See figure 3.9 for reference.

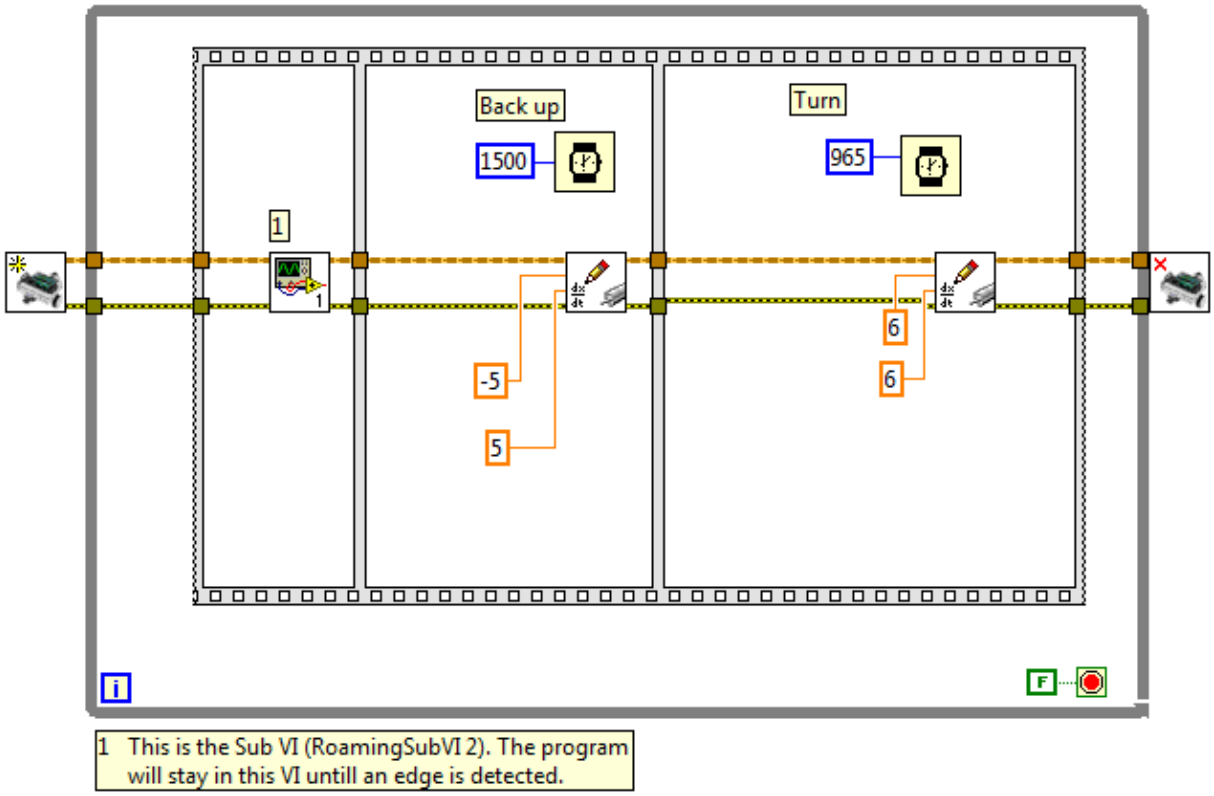

Figure 3.9

Step 12: You have now completed this lab exercise, save your code and run it on DaNI 2.0. Exercise extreme caution when testing this lab, even if your code is perfect, sensors are not.