UNIVERSITY OF NORTH CAROLINA AT CHARLOTTE

Department of Electrical and Computer Engineering
ECGR 4161/5196 Introduction to Robotics

Experiment No. 4 – Tilt Detection Using Accelerometer

Overview: The purpose of this experiment is to introduce the basic concepts of tilt detection using an accelerometer.

To accomplish the goal of navigation using an accelerometer each daNI robotic platform has been equipped with an accelerometer. Accelerometers are used to measure the acceleration of a device. Accelerometers do not necessarily have readouts, but rather send the information acquired to another device. This device will read the information and determine the next actions depending on what the device is programmed to do. Below is a picture of the accelerometer that will be used in this particular experiment.

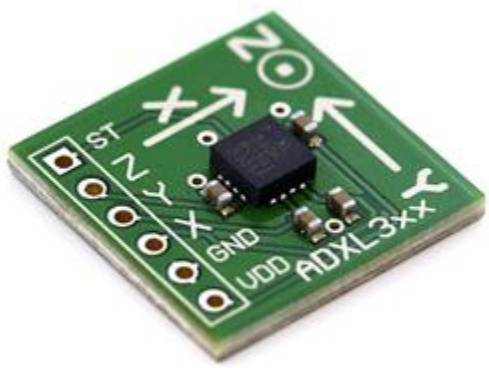

Figure 4.1: Dual Axis Accelerometer Breakout Board – ADXL320 [1]

There are many different types of accelerometers including single and multi-axis models. These accelerometers detect magnitude and direction of proper acceleration. The magnitude and direction may be used to sense orientation, coordinate acceleration, vibration, shock, and falling.

The ADXL320 is a small, thin, low power, complete 2-axis accelerometer with signal conditioned voltage outputs. The product measures acceleration with a minimum full-scale range of ±5g. It can measure static acceleration of gravity in tilt-sensing applications, as well as dynamic acceleration resulting from motion, shock or vibration. [2]

One common use of an accelerometer is in airbag deployment systems for automobiles. Accelerometers are also incorporated into a smartphones interface control and may be used to determine whether the screen will present landscape or portrait views.

Accelerometers are used for measuring the vibrations and movements in an object. Even the smallest movement can be sensed by the accelerometer. The device will generate electrical pulses depending on the direction of movement sensed by the accelerometer.

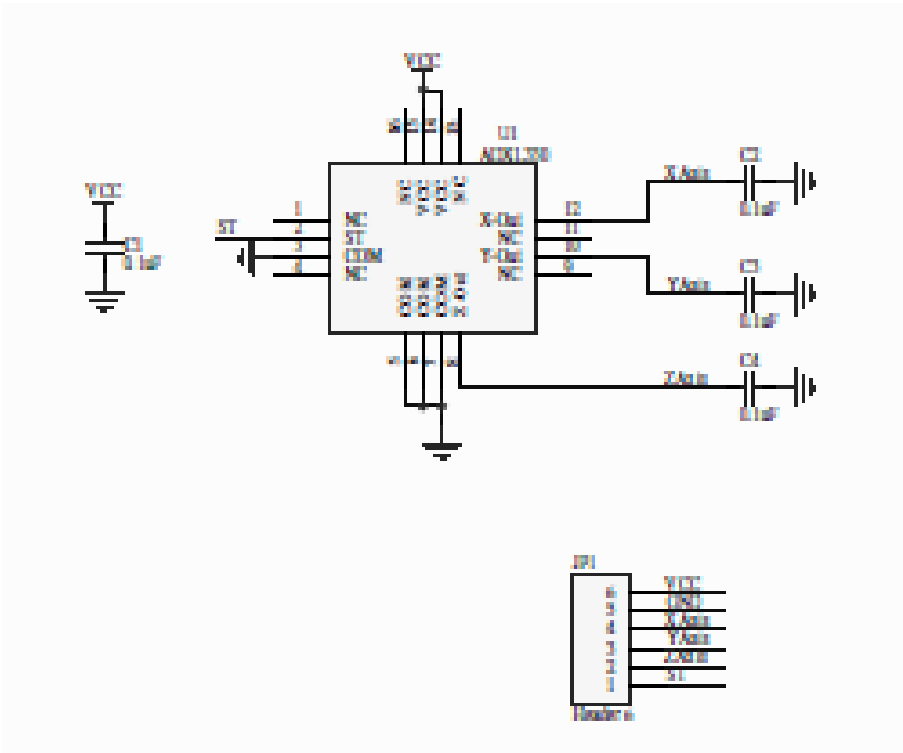

Figure 4.2: Sparkfun Accelerometer Sensor Schematic [3]

Please read the datasheet at http://www.sparkfun.com/datasheets/Accelerometers/ADXL320_0.pdf for more specifications, descriptions, and applications.

Sparkfun Dual Axis Accelerometer Specifications [1]

- 2-axis sensing
- Sensing Range of +/-5g
- Small, low profile package
- Low power: 350uA (typical)
- Wide supply voltage range: 2.4V to 5.25V
- 10,000g shock survival
- Good zero g bias stability
- BW adjustment with a single capacitor
- X-axis and Y-axis aligned to within 0.1º (typ)
- 2mg resolution at 60 Hz

Pre-Lab – Accelerometers

1. What is the difference between a single axis and a multi-axis accelerometer?

2. Will the accelerometer be used as a digital or analog device in this lab? Why?

3. How will the analog voltage value read by the accelerometer be converted to acceleration in this particular application?

Lab Session – Accelerometers

Accelerometers

In this lab the robot will have try and move forward up a ramp, however it will start off so that the front of the robot is centered with one edge of the ramp. This means that as the robot starts to move up the ramp, the wheels on one side will remain on the floor, and the robot will become tilted. The accelerometer will then need to "tell" the robot that its axis is off center. The robot will respond by backing up, and correcting its course to travel up the ramp so that all four wheels are on the ramp as it moves forward. The robot should be able to center itself on the ramp no matter which edge of the ramp the robot is initially centered on.

Detailed Steps:

1. Write code that will read the raw voltage from the accelerometer.
2. Convert the raw voltage from step 1 to acceleration. *(pre-lab question 3)*
3. Compare the acceleration value when the robot is flat, to when it is tilled and create three scenarios for the robot to follow using comparison statements. *(The robot will need to react differently based on which way it is tilted)*
4. Create motor control statements to move the robot in the correct directions based on the comparison statements developed in step 3.

Requirements

Req. 1 The robot must remain a constant speed when traversing different terrain.
Req. 2 One Dual Axis Accelerometer ADXL320 will be used.
Req. 3 Only the Accelerometer will be used during this lab.
Req. 4 A LabVIEW program will be written that will use the accelerometer to determine if the robot is tilted.
Req. 5 The robot will operate autonomously.
Req. 6 The robot will retain 4-wheeled locomotion.
Req. 7 The testing area will be designated by the course instructor. This will include a ramp to test tilt detection.
Req. 8 The robot will be tested multiple times and on multiple surfaces to determine consistency.

Connecting a new Sensor to the Robot:

Step 1. For this sensor, we want to read the raw analog voltage and compare it to the voltage when the sensor is level. Connect the Vcc pin of the sensor to a 5V source and the Ground pin to D Gnd.

Step 2. The X direction of the Accelerometer will be connected to an Analog Input on the board as well as the Y direction.

The sbRIO quick reference guide should be reference for specific pin locations.

References:

[1] http://www.sparkfun.com/products/847

[2] http://www.sparkfun.com/datasheets/Accelerometers/ADXL320_0.pdf

[3] http://www.sparkfun.com/datasheets/Sensors/ADXL3xx-Breakout.pdf