Scalable Reliability Monitoring of GaN Power Converter through Recurrent Neural Networks

Mehrdad Biglarbegian, Mohammadreza Baharani, Namwon Kim, Hamed Tabkhi, and Babak Parkhideh
Electrical and Computer Engineering Department
Energy Production and Infrastructure Center (EPIC)
University of North Carolina at Charlotte
Charlotte, NC, USA
Email: {mbiglarb, bparkhideh}@uncc.edu

***Abstract*—Reliability and operation of high-frequency Gallium Nitride (GaN) power converters are yet to be discovered. Coming with the reliability assessment and improving the life extension of power converters, the approach is to monitor semiconductor on-resistor changes as a precursor signature for diagnostic/prognostic. This paper presents a novel approach for hybrid condition-based prognostic and reliability monitoring of GaN devices. The proposed approach offers a multi-physics co-simulations solution for degradation fatigue modeling of the GaN power devices. With the availability of the most granular information deduced from the advanced devices, the paper develops deep learning based algorithms for online reliability in power electronics. The proposed algorithm is based on the prominent version of Recurrent Neural Network (RNN) named Long Short-Term Memory (LSTM). LSTM models are utilized for system training and simulation model calibrations, and eventually predicting the next states within the next time horizon.**

***Index Terms*—fault diagnostic, GaN semiconductor, high frequency dc-dc converter, long short-term memory, machine learning, recurrent neural network, reliability.**

I. Introduction

The GaN power semiconductor is a promising solution to improve the efficiency and the performance of future power converters [1], [2]. Despite the superior characteristics of GaN devices, they are often turned down due to limited information on reliability in many applications. Diagnostics/prognostics approaches enable a possibility of solving reliability issues in complex systems from design to operation for remaining useful life estimation, and mitigation of failure risks. The studies on reliability assessment and system monitoring have focused on component level reliability, damage accumulation, data analytic and condition-based predictions [3], [4]. Component failure approaches rely on the statistical model derived from obtained data in a laboratory environment and/or historical component usage [5]. These methods are not considered prognostics since they do not take into account the unit-to-unit difference and their specific usage history. The damage accumulation methods offer more accurate tendency, however, they need empirical verification and experimental observations. Data analytic and condition-based monitoring focus on big-data extraction, and estimation with the past usage history data provided by Accelerated Life Test (ALT). Several methods are proposed for mean-life estimations like six sigma, fault tree analysis, state space, and filtering estimations [6], [7].

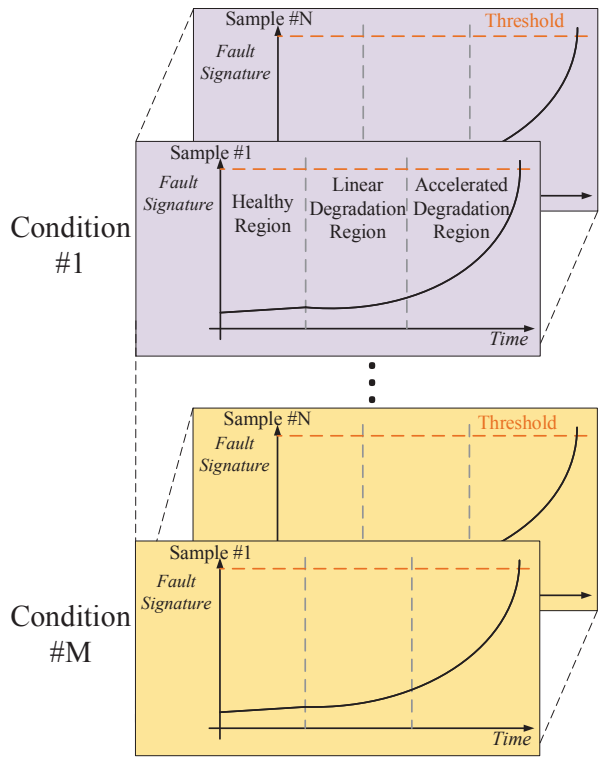

Fig. 1. **Conventional reliability solution**: #N samples of devices with #M conditions have been analyzed experimentally under accelerated life tests to find the reliability model. Adaptability with the new technologies and the experimental costs are their main drawbacks.

Furthermore, a newly developed Physics of Failure (PoF) analysis is presented to identify the failure root mechanism and drive quantitatively the reliability models. Theoretically speaking, it is possible to make life predictions based on these methods, however, the performance is likely going to be poor when compared to the actual failure time observed. This occurs because no knowledge of the actual component is used, and all the applied techniques considered the constant failure rates in components and system levels [5], [8]. Most of the developed approaches relied on stress on the devices under power/thermal cycling with the experimental observations shown in Fig. 1.

In the active monitoring technique, based on the available data from the system, a predictive online model for the converter operation can be derived. Having the limited knowledge of the existing state or the system status, the adaptive model can predict the system characteristics within the next time horizons shown in Fig. 2. The combination of failure diagnostics (model derivation) and self-verification techniques (deep learning analysis) can be evolved as a new generation of physics-based diagnostic/prognostic scheme to develop an adaptive model for a system level reliability.

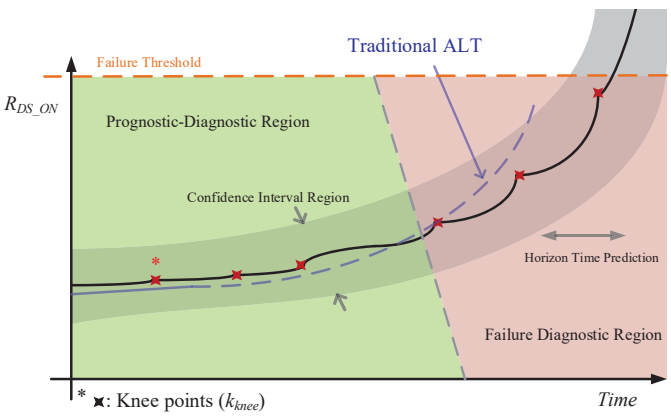

Fig. 2. **Proposed solution**: Adaptive prognostics concept using multi-physics co-simulations and machine learning algorithm with advanced monitoring.

This paper presents a hybrid condition-based prediction where the ALT will be run in multi-physics simulations. Based on the simulated reliability model, a new RNN machine learning scheme is proposed for the system prognostics. Section II discusses the precursor identification for GaN degradation. Section III describes the component selection for the reliability analysis and modeling of solder fatigue in the power converter. This section also proposes the methodology for health conditioning system. Finally, Section IV focuses on machine learning method for parameter estimations of the system calibration, followed by the conclusions and future work in Section V.

II. Failure Mechanism in Power Semiconductors

A. Challenges for reliability evaluation in GaN power devices

There is not much literature available studying the reliability of GaN high frequency converters, while the focus has remained at the device design and fabrication levels [9]. To reduce the cost of the GaN devices, fabrication of GaN on the Si-substrates is widely used in common technologies. However, due to inherent mismatching of GaN and Si crystals, this may create new reliability issues in GaN power devices due to the different thermal coefficients.

In general, the failure mechanism in power semiconductors can be categorized into two main groups as extrinsic and intrinsic failures. The extrinsic failures include the transistor packaging issues and mainly summarized as a bond-wire lift, die solder detachment, and contact migration [10], [11]. Most of these studies verified that the bond-wire lift has the severe effect on the device failure over time. However, because of the significant progress of developing new packages, such as a passivated die or GaN-PX, the bond-wire issues cannot be found as the failure in the modern GaN devices [12].

The intrinsic refers to failure damages coming from the semiconductor itself as for GaN power devices. In general, they are categorized into three main sections: thermally activated mechanisms, hot electrons, AlGaN/GaN-based failures. The thermally activated mechanism failure refers to degradation of Ohmic, Schottky, gate metal, and surface passivation. However, the recent study shows their excellent stability below 300 °C [13]. The hot electrons failure mainly goes to trapping of electrons in the semiconductor materials, which results in the defection of a lattice. Degradation in AlGaN/GaN properties have been thoroughly studied in many articles and is known as inverse piezoelectric effect [14].

It is worth mentioning the existing failure in Si devices could potentially be existed in compound semiconductors (GaN, AlGaN); these failures could be summarized as dielectric breakdown (breakdown issues from strong electric fields between gate-(drain/source), time-dependent dielectric breakdown, which occurs due to electron trapping in AlGaN layer and the accumulate of oxide in the gate interface, and corrosions [15], [16]. For the applications with nominal operation below 200 °C, the $R_{ds(on)}$ changes is a proper precursor to identify the failure in GaN power devices [17]–[19].

B. Thermomechanical susceptibility

In the existing lateral enhancement mode GaN products, GaN is grown on the Si-substrate. Due to inherent mismatching of stacked materials, the different Coefficient of Thermal Expansion (CTE) of the mounted GaN onto the Printed Circuit Board (PCB) causes crack generation. The GaN power device is subject to the high power, which makes the thermomechanical stress in the solder joints among the most susceptible sections. Therefore, the crack could propagate along the solder joints and eventually it will result in permanent failure in the devices. The solder joint fatigue existed in Si-based devices, however, the fatigue in the compound semiconductors will be worse. Although apparently there is no direct correlation between crack propagation and physical parameter extraction, the previous study showed this mechanism could have an impact on gradual increasing of the electrical resistance [20]–[22].

III. GaN Power Converter-Digital Twin

A. Reliability framework of power converter

To comment on the reliability assessment of power converters, it is important to have a robust converter. Therefore, we summarized all the possible candidate of GaN devices that could be used for this study. The loss index of $R_{ds(on)} \times Q_g$ is defined to compare the efficiency power conversion in different devices, the thermal resistance and the reverse recovery charge also considered as shown in Table I.

TABLE I
SELECTED DEVICE CHARACTERISTICS COMPARISONS FOR CONVERTER DESIGN

Type	Part Number	Voltage	Current	On-Resistance	Gate Charge	Loss Index	Thermal Resistance	Reverse Recovery Charge	Package
		V	A	$m\Omega$	nC	$R_{ds(on)} \times Q_g$	$°C/W$	nC	
Enhancement	GS66516T	650	60	25	12.1	302.5	0.3	0	GaN_{PX}
Enhancement	GS66516B	650	60	25	12.1	302.5	0.55	0	GaN_{PX}
Enhancement	GS66504B	650	15	100	3	300	1	0	GaN_{PX}
Cascode	TPH3208L	650	20	130	10	1300	1.3	54	PQFN
Cascode	TPH3206LD	600	17	180	6	1080	1.55	54	PQFN
Cascode	TPH3205WS	600	36	52	28	1456	1.0	136	TO247
Enhancement	PGA26E07BA	600	26	56	5	280	1.3	0	DFN
Enhancement	PGA26E19BA	600	10	140	4	560	1.9	0	DFN
Cascode	NTP8G206N	600	17	150	6.2	930	1.55	53	TO220
Depletion	MGG1T0617D	600	30	170	4	680	-	0	Die

*In this table, RF GaN products, GaN power devices with voltage rating <600V, and devices with integrated gate driver circuits are not included.

The various CTE of stacked layers inject stress concentrations, they cause deformation of materials. The deformation mainly is observed as a crack on the solder joints, and eventually results in permanent failure of the compound semiconductors. The characterization of the crack propagation is very hard because of the complexity of the device and assembling of stacked layers. Moreover, challenging on the measurements of the operation of high frequency converter makes the system modeling very difficult. Therefore, a new framework is proposed to be able to characterize the unknown parameters that physically are not possible to measure them on the operating power converter. The main contribution is to correlate the mathematical formulations of the direct measurement of $R_{ds(on)}$ the corresponding mechanical parameters responsible of the fatigue. The proposed framework consists of three main sections as simulation-based ALT, online system monitoring, and the machine learning unit.

In the simulation-ALT, the energy-based fatigue of the power semiconductor under stress-strain hysteresis is modeled. The gerberfiles of the converter layout will be imported, and the semiconductor device is modeled accordingly. Knowing the device conduction loss, the ALT is carried out under temperature cycling with the Finite Element Analysis (FEA). The simulation output provides a degradation model of the actual system. The model calibration is needed due to lack of detailed information of mounted device onto the PCB in the real system. The calibration will be done with the online measurements and update the unknown parameters through machine learning units. The online monitoring system focuses on system measurement of the main physical parameters (e.g. voltage, current, and the temperature). The resistance of the semiconductor, total loss, and the converter power range can be calculated based on the captured data. The machine learning unit based on the proposed model calibrates the simulation model according to the actual measurements shown in Fig. 3.

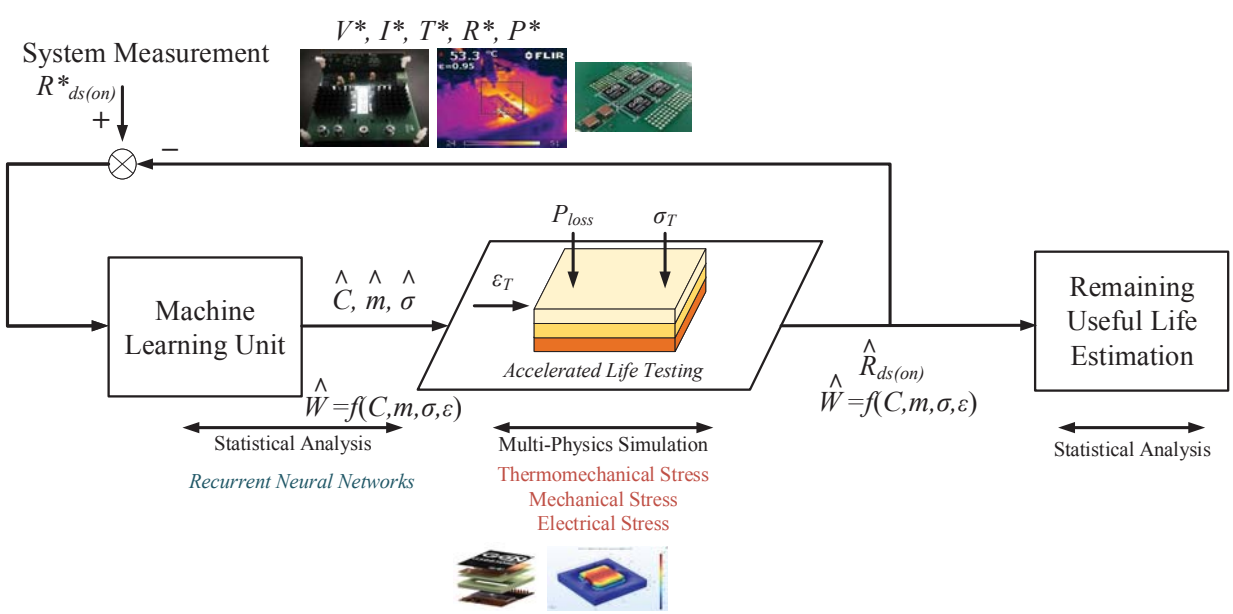

Fig. 3. **Proposed framework for GaN power converter Digital Twin**: The online device monitoring, and simulation-based ALT for reliability analysis. A machine learning system is developed for system calibrations, and unknown parameter estimations.

B. Energy-based fatigue failure modeling

Thermal fatigue failure due to the CTE of materials is the main failure mechanism of the solder joint connections, especially in the compound semiconductors. The increase in the electrical resistance during fatigue has been studied and verified in [20], [21]. The energy-based fatigue is used by focusing on the energy accumulated in the susceptible regions. The dissipated energy occurs within the strain-stress diagram, and the variations of resistance-strain are depicted in (1):

$$\Delta R_{ds(on)} = R_{ds(on)}(1 + 2v + a)\epsilon \tag{1}$$

where v is Poisson ratio, a is the resistivity of the material, and ϵ is the material strain [22]. These parameters depend on the material and the operational temperature can be considered as constant values. The total mechanical strain of the solder deformation can be given as (2):

$$\epsilon_t = \epsilon_e + \epsilon_c + \epsilon_p \tag{2}$$

where the ϵ_e, ϵ_c, ϵ_p are elastic, creep and plastic strains respectively, and can be calculated in (3):

$$\left\{ \begin{aligned} \frac{d\epsilon_s}{dt} &= C_{ss}[sinh(\alpha\sigma)]^n exp(\frac{-E_a}{kT}), \epsilon_e = \sigma/E \\ \frac{d\epsilon_c}{dt} &= \frac{d\epsilon_s}{dt}(1 + \epsilon_t B)exp(-B\frac{d\epsilon_c}{dt}t), \epsilon_p = C_p\sigma^m \end{aligned} \right\} \tag{3}$$

During solder fatigue, the plastic strain plays the major role, where the rests of the strain changes remain almost constant [6], [23]. Knowing the material properties and the junction temperature of the device, the parameters associated with the elastic and creep strains will be constant:

$$\Delta W_{hys} = \oint_{Hystloop} \sigma d\epsilon \tag{4}$$

where in (4) σ is the stress, ϵ is strain, and W_{hys} is the cyclic dissipated energy loss.

Knowing the changes of strain (ϵ) could result in changes of on-resistance $R_{ds(on)}$, while the ALT runs for each iteration, a series test resistor will be added to the model to calculate the resistance variations. It can be presumed that the energy loss calculated in ΔW_{hys} will potentially affect on the infinitesimal variations on the physical measurement of the on-resistance. The simulated results for on-resistance for more than 10000 iterations (represented about 4-hour of ALT) in COMSOL shown in Fig. 4.

C. Physics of failure-statistics model in cloud computations

This section presents the framework of the online reliability awareness system for diagnostic modeling and prognostic development. The proposed architecture uses the advanced communication, control and power structure for reliability analysis. The four major sections are a) power stage development, b) sensing unit, c) control system and d) cloud computation networks. Here, a buck converter consisting of four GaN modules (GS66516B) is designed in the parallel configuration to meet the high efficiency operation as well as the advanced sensing units for voltage and current measurements.

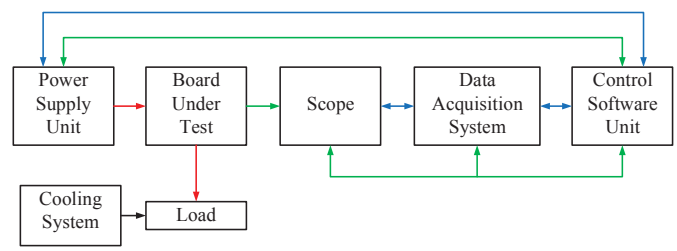

Fig. 5. **Data acquisition system**: The automatic supervisory system control is designed for data collection and converter protection. red: power path, blue: control signals, and green: sensing signals.

Moreover, automated data acquisition system for the switching converters is designed shown in Fig. 5. This system is implemented in Python, and all the units were operated continuously over 100 billion electrical cycles and data also stored on the cloud shown in Fig. 6. Two threads of $R_{ds(on)}$ measurement and the converter protection are designed in the automation system. To avoid the transient noise, $R_{ds(on)}$ is calculated only during 40%-60% of the slope in both rising and falling of the inductor current [24].

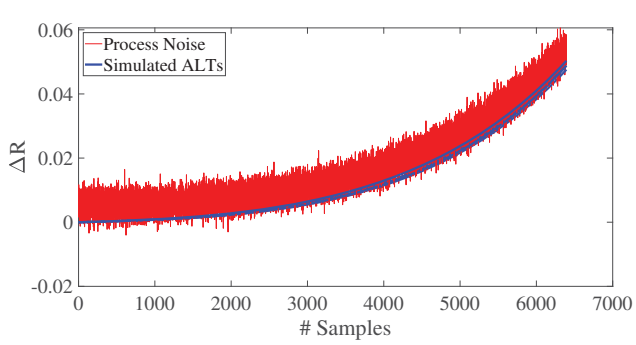

Fig. 4. **Simulation result of Accelerated Life Test**: The variations $R_{ds(on)}$ under temperature cycling due to solder fatigue of GaN on Silicon.

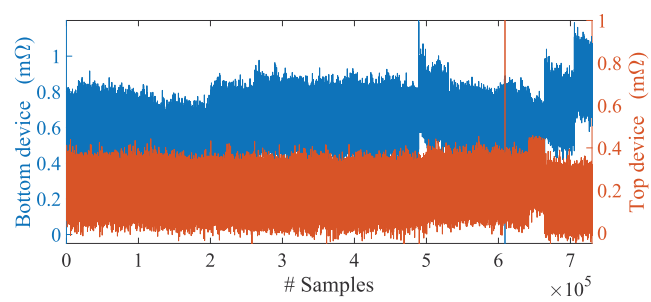

Fig. 6. **The filtered on-resistance variations**: The buck converter was tested over 100 billion electrical cycles $400W$ and $100kHz$. The drain-source on-resistance variations was captured automatically, and stored on the cloud networks.

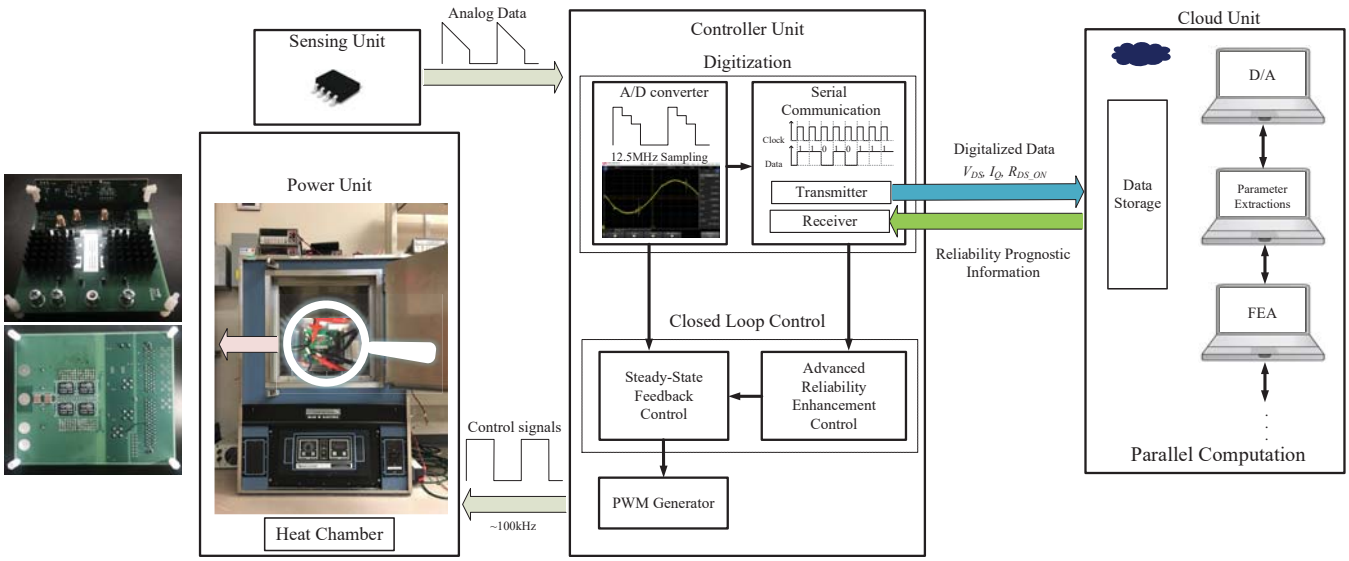

Fig. 7. **High frequency GaN power converters-digital twin**: Data acquisition system for characterization of power converters, and multi-process computation on cloud networks. The proposed infrastructure architecture provides feasibility of data-processing for adaptive prognostics in power electronics converters.

The cloud network consisting of multi-processors, are considered to run the advanced parallel computations for model derivation with the co-simulation multi-physics FEA. All the deep learning algorithms and model calibrations will be performed here. This layer potentially is a data storage unit, which could be available for data processing, and advanced algorithm development shown in Fig. 7.

IV. Machine Learning Unit for Prognostics

A. RNN Modeling for On-Resistance Monitoring

Recurrent Neural Networks (RNNs) are a branch of neural networks specialized for analyzing a sequence of data notated by $X = [x_1 \quad x_2 \quad ... \quad x_\tau]$. The X vector is the combination of data sets, either through online on-resistance or stored from the past history. Each RNN computation cell, i.e. neuron, passes its current state to the next adjacent node to inform its updated parameter from the past events, and enables RNN to generalize time sequences. An example of an RNN cell and its unrolling version of time sequences is depicted in Fig. 8. A standard RNN cell suffers from *vanishing gradient* issue that prevents the network from reaching to the earliest states in deep RNNs [25]. To mitigate this issue, Long Short-Term Memory (LSTM) is proposed by introducing a subset of cyclical node inside its cell known as *memory*. As shown in Fig. 9, each cell has three gates namely input, output, and forget gates [26]. The model of LSTM cell is given by:

$$\begin{aligned}
&Input\ gate: && i_t = \sigma(W_i v_t + b_i),\\
&Forget\ gate: && f_t = \sigma(W_f v_t + b_f),\\
&Output\ gate: && o_t = \sigma(W_o v_t + b_o),\\
&New\ candidate: && \tilde{c}_t = tanh(W_c v_t + b_c),\\
&Updating\ state: && c_t = f_t \odot c_{t-1} + i_t \odot \tilde{c}_t,\\
&LSTM\ output: && h_t = o_t \odot tanh(c_t)
\end{aligned} \tag{5}$$

where $v_t = [x_t \quad h_{t-1}]$, σ is sigmoid function, and $\odot$ is Hadamard product. Here, W_i, W_f, W_o are network weights, b_i, b_f, b_o, and c_0 are network biases. These parameters are network model, which extracted during network training. The input function chooses which values should be updated, and forget function decides which portion of cell memory will be erased. The updating state function saves new candidates in the cell memory, and LSTM output will be generated accordingly.

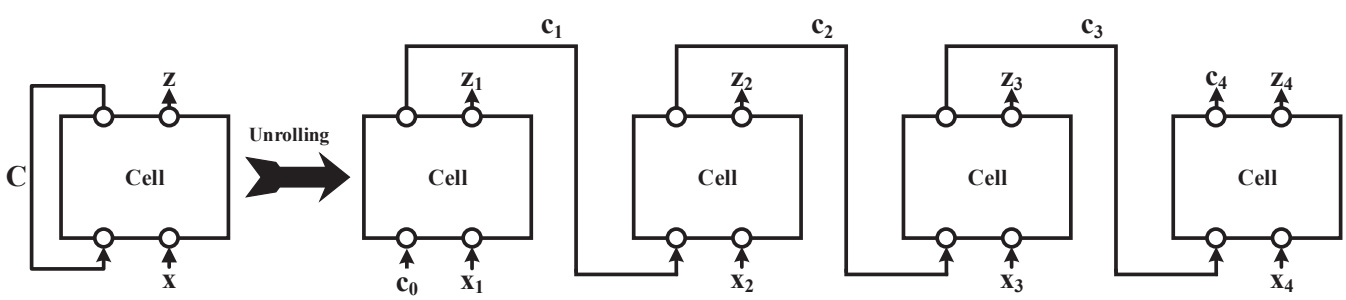

Fig. 8. **Recurrent Neural Networks (RNNs)**: An example of standard RNN cell and its unrolling version for four input time sequence.

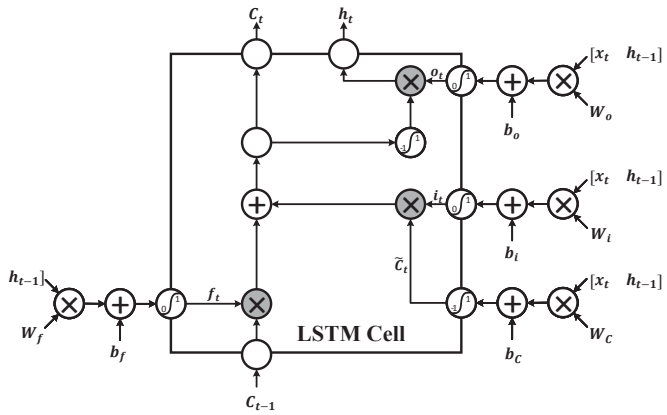

Fig. 9. **Long Short-Term Memory (LSTM)**: Inside view of an LSTM cell. The Hardmard multiplication is shown in form of grayed circles.

By introducing $Y = [y_1 \quad y_2 \quad \dots \quad y_\tau]$ as the system output (on-resistance), the loss function of LSTM is defined:

$$\mathcal{L}(h, Y) = \sum_{t=1}^{\tau} \mathcal{L}_t(h_t, y_t) \tag{6}$$

where $\mathcal{L}(h_t, y_t)$ is the mean squared error of the regression function, and the gradient descend approach is applied to minimize the cost function error.

B. Verification and results

To verify the feasibility of the proposed system, we initially modeled a Si-power MOSFET (TO-220 packages), where the experimental data sets also provided by NASA [27]. For the purpose of training the network, we made two different scenarios: a) selected four devices from NASA (#9, #11, #12, and #38) b) emulated four simulation results under ALT within the junction operating temperature with no prior knowledge of the system characteristics.

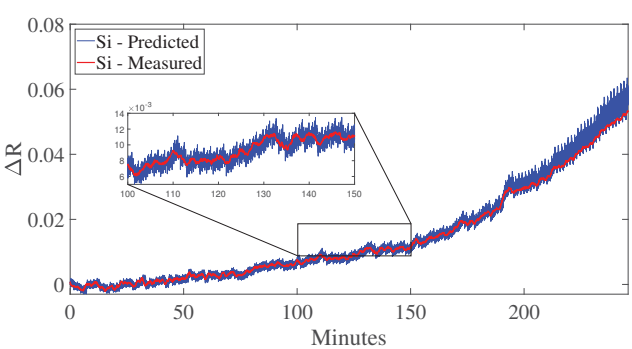

Fig. 10. **Model Verification**: The $R_{ds(on)}$ variations for Si-MOSFET is predicted with LSTM using the limited historical experimental data, and the simulation model.

The network is trained in such a way to receive the last 20 sensed on-resistance and predict the next 104 samples, which represent the next one minute in ALT. We used Device #36 from NASA to evaluate the accuracy of our model. Although there is only limited information for training the algorithm, the outcome is presented in Fig. 10 depicts the network results.

We extended the work to analyze a single unit of GaN power converter with the proposed hybrid condition-based prognostic. The simulation platform is designed for GaN on Si for ALT analysis based on the rated power of the semiconductor total loss discussed in Section III. Four simulation results are provided for the training, and then the machine learning technique is applied. The results are provided in Fig. 11. Using the simulation analysis for the training of the system, the predicted results showed consistency within the time interval frame.

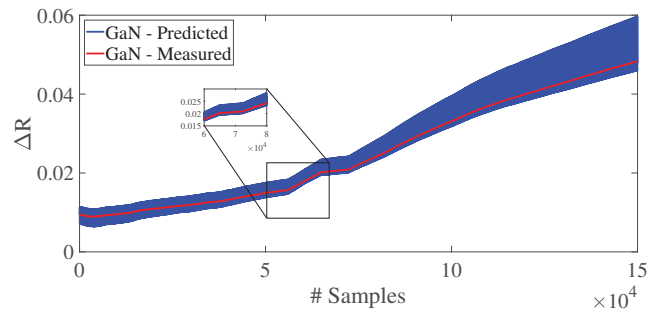

Fig. 11. **Prognostic results**: The $R_{ds(on)}$ variations for GaN with Si-substrate using the FEA simulations, and only one set of data for training.

V. Conclusion

This paper presented a novel framework for reliability assessment of power converters. The approach can be used for new technologies where limited information on their reliability is available. In this paper, the focus was on the monitoring of the on-resistance variations over the time as a precursor for failure diagnostics of the synchronous $400W$ GaN buck converter at $100kHz$. The failure mechanism of solder fatigue with the energy-based modeling was discussed using FEA simulations. The RNN method is applied for data analysis and model calibration. The proposed network model verified with Si-MOSFET using the simulation analysis and available experimental data from NASA. We also extended our network model to predict the GaN converter trajectory resistance.

Acknowledgment

This research was supported by the National Science Foundation under Award No. 1610250. The authors also would like to thank Dr. Mohammad Biglarbegian at the University of Guelph, Energy Production and Infrastructure Center (EPIC), and ECE Department at UNC-Charlotte.

References

[1] Y. Lei, C. Barth, S. Qin, W.-C. Liu, I. Moon, A. Stillwell, D. Chou, T. Foulkes, Z. Ye, Z. Liao *et al.*, "A 2 kW, single-phase, 7-level flying capacitor multilevel inverter with an active energy buffer," *IEEE Transactions on Power Electronics*, 2017.

[2] J. Choi, D. Tsukiyama, Y. Tsuruda, and J. M. Rivas, "High-frequency, high-power resonant inverter with eGaN FET for wireless power transfer," *IEEE Transactions on Power Electronics*, 2017.

[3] M. Pecht, *Prognostics and Health Management of Electronics*. Wiley Online Library, 2008.

[4] A. Saxena, J. Celaya, E. Balaban, K. Goebel, B. Saha, S. Saha, and M. Schwabacher, "Metrics for evaluating performance of prognostic techniques," in *Prognostics and health management, 2008. phm 2008. international conference on*. IEEE, 2008, pp. 1–17.

[5] N. Degrenne, J. Ewanchuk, E. David, R. Boldyrjew, and S. Mollov, "A review of prognostics and health management for power semiconductor modules," 2014.

[6] H. S.-h. Chung, H. Wang, F. Blaabjerg, and M. Pecht, *Reliability of power electronic converter systems*. Institution of Engineering and Technology, 2015.

[7] S. Dusmez and B. Akin, "An accelerated thermal aging platform to monitor fault precursor on-state resistance," in *Electric Machines & Drives Conference (IEMDC), 2015 IEEE International*. IEEE, 2015, pp. 1352–1358.

[8] J. R. Celaya, A. Saxena, and K. Goebel, "Uncertainty representation and interpretation in model-based prognostics algorithms based on Kalman Filter estimation," National Aeronautics and Space Administration Moffett Field CA Ames Research Center, Tech. Rep., 2012.

[9] R. Strittmatter, C. Zhou, A. Lidow, and Y. Ma, "Enhancement mode Gallium Nitride transistor reliability," in *Applied Power Electronics Conference and Exposition (APEC), 2015 IEEE*. IEEE, 2015, pp. 1409–1413.

[10] I. Kovacevic, U. Drofenik, and J. W. Kolar, "New physical model for lifetime estimation of power modules," in *Power Electronics Conference (IPEC), 2010 International*. IEEE, 2010, pp. 2106–2114.

[11] J. M. Anderson and R. W. Cox, "On-line condition monitoring for MOSFET and IGBT switches in digitally controlled drives," in *Energy Conversion Congress and Exposition (ECCE), 2011 IEEE*. IEEE, 2011, pp. 3920–3927.

[12] J. Roberts, "Maximizing GaN power transistor performance with embedded packaging," in *Proc. Appl. Power Electron. Conf. Expo.(APEC)*, 2015, pp. 1–14.

[13] S. Singhal, J. Roberts, P. Rajagopal, T. Li, A. Hanson, R. Therrien, J. Johnson, I. Kizilyalli, and K. Linthicum, "GaN-on-Si failure mechanisms and reliability improvements," in *Reliability Physics Symposium Proceedings, 2006. 44th Annual., IEEE International*. IEEE, 2006, pp. 95–98.

[14] G. Meneghesso, G. Verzellesi, F. Danesin, F. Rampazzo, F. Zanon, A. Tazzoli, M. Meneghini, and E. Zanoni, "Reliability of GaN high-electron-mobility transistors: State of the art and perspectives," *IEEE Transactions on Device and Materials Reliability*, vol. 8, no. 2, pp. 332–343, 2008.

[15] S. Warnock and J. A. del Alamo, "Stress and characterization strategies to assess oxide breakdown in high-voltage GaN field-effect transistors," in *Compound Semiconductor Manuf. Technol. Conf*, 2015, pp. 311–314.

[16] D. J. Cheney, E. A. Douglas, L. Liu, C.-F. Lo, B. P. Gila, F. Ren, and S. J. Pearton, "Degradation Mechanisms for GaN and GaAs High Speed Transistors," *Materials*, vol. 5, no. 12, pp. 2498–2520, 2012.

[17] S. R. Bahl, D. Ruiz, and D. S. Lee, "Product-level reliability of GaN devices," in *Reliability Physics Symposium (IRPS), 2016 IEEE International*. IEEE, 2016, pp. 4A–3.

[18] E. A. Jones, F. Wang, and B. Ozpineci, "Application-based review of GaN HFETs," in *Wide Bandgap Power Devices and Applications (WiPDA), 2014 IEEE Workshop on*. IEEE, 2014, pp. 24–29.

[19] S. Song, S. Munk-Nielsen, C. Uhrenfeldt, and I. Trintis, "Failure mechanism analysis of a discrete 650V enhancement mode GaN-on-Si power device with reverse conduction accelerated power cycling test," in *Applied Power Electronics Conference and Exposition (APEC), 2017 IEEE*. IEEE, 2017, pp. 756–760.

[20] X. Liu, "Processing and reliability assessment of solder joint interconnection for power chips," Ph.D. dissertation, 2001.

[21] M. H. Azarian, E. Lando, and M. Pecht, "An analytical model of the rf impedance change due to solder joint cracking," in *Signal Propagation on Interconnects (SPI), 2011 15th IEEE Workshop on*. IEEE, 2011, pp. 89–92.

[22] J. H. Constable and C. Sahay, "Electrical resistance as an indicator of fatigue," *IEEE Transactions on Components, Hybrids, and Manufacturing Technology*, vol. 15, no. 6, pp. 1138–1145, 1992.

[23] R. Darveaux, "Effect of assembly stiffness and solder properties on thermal cycle acceleration factors," 2006.

[24] M. Biglarbegian, S. Mostafavi, S. Hauer, S. J. Nibir, N. Kim, R. Cox, and B. Parkhideh, "On condition monitoring of high frequency power gan converters with adaptive prognostics," in *Applied Power Electronics Conference and Exposition (APEC), 2018 IEEE*. IEEE, 2018, pp. 1272–1279.

[25] S. Hochreiter, Y. Bengio, P. Frasconi, J. Schmidhuber *et al.*, "Gradient flow in recurrent nets: the difficulty of learning long-term dependencies," 2001.

[26] S. Hochreiter and J. Schmidhuber, "Long short-term memory," *Neural computation*, vol. 9, no. 8, pp. 1735–1780, 1997.

[27] J. Celaya, A. Saxena, S. Saha, and K. F. Goebel, "Prognostics of power MOSFETs under thermal stress accelerated aging using data-driven and model-based methodologies," 2011.