A Context-aware Attention Network for Interactive Question Answering

Huayu Li [1], Martin Renqiang Min [2], Yong Ge [3], and Asim Kadav [4]

(1) UNC Charlotte, hli38@uncc.edu, (2) NEC Laboratories America, renqiang@nec-labs.com
(3) University of Arizona, ygestrive@gmail.com (4) NEC Laboratories America, asim@nec-labs.com

UNC CHARLOTTE

NEC LABORATORIES AMERICA

Main Contributions

- ✓ **We develop a new encoder-decoder model called CAN for QA with two-level attention which knows when it can readily output an answer and when it needs additional information from users depending on different contexts.**
- ✓ **We augment the encoder-decoder framework for QA with an interactive mechanism for handling user's feedback, which immediately changes sentence-level attention to infer a final answer without additional model training.**
- ✓ **We generate a new dataset based on the Facebook bAbI dataset, namely ibAbI, covering several representative IQA tasks.**
- ✓ **We conduct extensive experiments to show that our approach outperforms state-of-the-art models on both QA and IQA datasets.**

Background

Web Technology | Information Overload | Question Answering Applications

✓ **Challenges**

- ➢ Understanding Semantic Meaning
- ➢ Generating Answer

Problem Statement

✓ Given a story, consisting of a sequence of statements, and a *question*, the goal is to generate answer to the question.

1. On the Research section of our website, you will see a link to our freely downloadable PDFs.
2. For the PDFs, click on the publication you are interested in downloading.

Question: How do I gain access to the free PDFs?
Answer: Research Section

Acknowledgement

✓ **This work is partially supported by NIH (1R21AA023975-01) and NSFC (61602234, 61572032, 91646204, 61502077).**

Methods

Motivation

The office is north of the kitchen.
The garden is south of the kitchen.
Q: What is north of the kitchen?
A: Office

An Idea QA Example

The master bedroom is east of the garden.
The guest bedroom is east of the office.
Q: What is the bedroom east of?
A: Unknown

A QA Example with Incomplete Information

An Example with CAN

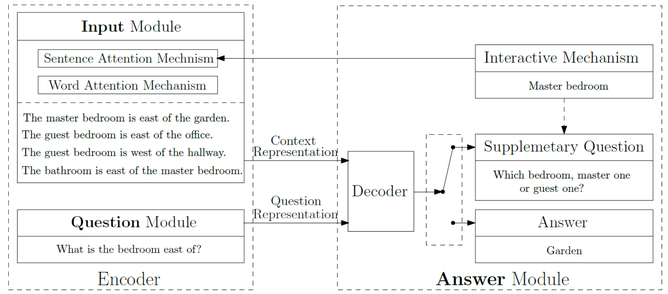

An Example of Interactive Mechanism

1. The master bedroom is east of the garden.
2. The guest bedroom is east of the office.

Question: What is the bedroom east of?

System: Which bedroom, master one or guest one? ← Supplementary Question
User: Master bedroom ← User's Feedback
System: Garden ← Answer

Architecture

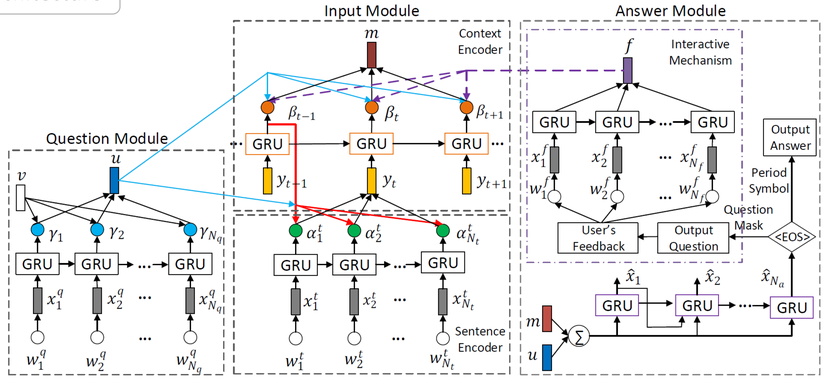

Architecture of the Proposed CAN Model

Question Module

- Attention Mechanism

$$\gamma_j = softmax(\mathbf{v}^T \mathbf{g}_j^q)$$

Example: Where is the football?

Input Module

➢ **Sentence Encoder**

$$\mathbf{e}_i^t = \sigma(\mathbf{W}_{ee} tanh(\mathbf{W}_{es}\mathbf{s}_{t-1} + \mathbf{W}_{eh}\mathbf{h}_i^t + \mathbf{b}_e^{(1)}) + \mathbf{b}_e^{(2)})$$

Previous Context Information — *Its Special Meaning*

➢ **Context Encoder**

$$\beta_t = softmax(\mathbf{u}^T \mathbf{s}_t)$$

Answer Module

End-of-Sentence token is used to determine output choice.

➢ **Predict Answer**

- If the model has sufficiently strong evidence for a successful answer prediction, the decoder will directly output the answer.
- Answer is either a single word or a sentence.

➢ **Enable Interactive Mechanism**

- Decoder generates a supplementary question for the user.

$$\mathbf{f} = \frac{1}{N_f}\sum_{d=1}^{N_f} \mathbf{g}_d^f \qquad \mathbf{r} = tanh(\mathbf{W}_{rf}\mathbf{f} + \mathbf{b}_r^{(f)})$$

$$\beta_t = softmax(\mathbf{u}^T \mathbf{s}_t + \mathbf{r}^T \mathbf{s}_t)$$

Experimental Results

IQA Data (*ibAbI*): *http://www.cs.toronto.edu/pub/cuty/IQAKDD2017*

Examples of Three Different Tasks on the Generated ibAbI Datasets

(a) IQA Task 1	(b) IQA Task 4	(c) IQA Task 7
John journeyed to the garden. Daniel moved to the kitchen. Q: Where is he? SQ: Who is he? FB: Daniel A: Kitchen	The master bedroom is east of the garden. The guest bedroom is east of the office. The guest bedroom is west of the hallway. The bathroom is east of the master bedroom. Q: What is the bedroom east of? SQ: Which bedroom, master one or guest one? FB: Master bedroom A: Garden	John grabbed the bread. John grabbed the milk. John grabbed the apple. Sandra went to the bedroom. Q: How many special objects is John holding? SQ: What objects are you referring to? FB: Milk, bread A: Two

Performance Comparison in terms of Accuracy on IQA Datasets with Different IQA Ratios

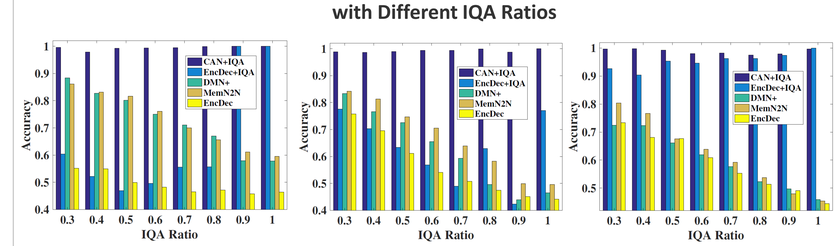

(a) IQA Task 1 (b) IQA Task 4 (c) IQA Task 7